International Journal of Business and Management; Vol. 8, No. 9; 2013
ISSN 1833-3850 E-ISSN 1833-8119
Published by Canadian Center of Science and Education

The Inference of the Characteristics of Pharmaceutical Drug Advertising upon the level of Physicians' Acceptance of Drugs in Jordan

Hani H. Al-Dmour[1], Zu'bi M. F. Al-Zu'bi[2] & Ashraf Ghassan Fahmawi[1]

[1] Marketing Department, Faculty of Business, The University of Jordan, Jordan

[2] Business Management Departments, Faculty of Business, The University of Jordan, Jordan

Correspondence: Zu'bi M. F. Al-Zu'bi, University of Jordan P.O. Box 13413 Amman, 11942 Jordan. Tel: 962-7956-2939. E-mail: z.alzubi@ju.edu.jo

Received: December 25, 2012 Accepted: January 22, 2013 Online Published: April 14, 2013

doi:10.5539/ijbm.v8n9p63 URL: http://dx.doi.org/10.5539/ijbm.v8n9p63

Abstract

This research aims to identify the characteristics of pharmaceutical drug advertisements and to investigate its influence upon the level of physicians' acceptance. The population of the research consists of all physicians working in the private sector in Amman. The researchers used a questionnaire to collect the primary data for the sample of the research in order to achieve the researcher's objectives. The results of the research showed that the level of physicians' acceptance is affected by different characteristics of pharmaceutical advertisement, such as advertisement through broadcast, network media, and advertisement language and advertisement duration.

The results also showed that advertisement duration is the most influential characteristic of advertisement on the level of physicians' acceptance, while the effect of broadcast media is stronger than network media on the level of physicians' acceptance, the advertisement through print media, advertisement appeal, advertisement simplicity, advertisement credibility and advertisement frequency have no influence on the level of physicians' acceptance.

The researchers recommended that marketing managers should focus on different characteristics of pharmaceutical drug advertisement to increase the levels of physicians' acceptance mainly through broadcast and network media.

Keywords: pharmaceutical industry, marketing, physicians' acceptance

1. Introduction

Pharmaceutical advertising plays a major role in the marketing of pharmaceutical products, leading to crucial modifications to methods employed by pharmaceutical companies in product marketing. The most common method of pharmaceutical marketing in Jordan, a developing country, is through medical representatives visiting physicians at their offices, providing free samples for distribution to patients, and advertising in professional journals. This has been slowly changing since 1997, when the United States Food and Drug Administration (FDA) modified its policy on pharmaceutical marketing. This change increased the feasibility of advertising drugs through broadcast media, and is therefore believed to have provided the impetus for a move from doctor-directed to consumer-directed advertising not only in the US, but also elsewhere (FDA 1997). The direct result of such advertising is that patients themselves begin to request certain advertised medicine, and this results in a greater number of prescriptions written by doctors (Barbara *et al.*, 2003). Physicians also exposed to pharmaceutical advertisement directed to final consumers. This may affect their acceptance to these advertisements, finally changing their prescription behavior. However, the acceptance of pharmaceutical advertisements rely on the amount, credibility, and quality of information included in these advertisements, and the media that pharmaceutical companies adopt in advertising to final consumers and physicians. In order for pharmaceutical companies to compete in the market they must change their strategies in advertising by choosing the most appropriate advertising characteristics. Therefore, the current research will investigate the effect of pharmaceutical advertisement characteristics on the degree of drug acceptance for Jordanian physicians, and the effect of these characteristics on their prescriptions.

1.1 Research Problem

The marketing activities of international drug companies through pharmaceutical advertising in different media as television, internet, radio and other mass and social media, might affect the choices or preferences that Jordanian physicians have toward specific brands of drugs. In order to maintain a high market share, Jordanian pharmaceutical drug companies should know how their pharmaceutical advertisement characteristics and marketing promotion tools will affect the degree of drug acceptance of Jordanian physicians. The problem of this research stems from the following questions:

1) To what extent does pharmaceutical drug advertising influence the level of physicians' acceptance of drugs in Jordan?
2) What are the most important advertising characteristics that highly affect the level of physicians' acceptance (print media, broadcast media, network media, advertisement language, advertisement appeal, advertisement simplicity, advertisement credibility, advertisement frequency and advertisement duration)?

1.2 Research Importance

The importance of this research stems mainly from the following two points:

1) This research will be an important development to current understanding by clarifying the relationship between drug advertisement characteristics and the degree of physicians' acceptance of these drugs. The gap amongst the previous studies stems from the fact that they have been conducted on one or two advertisement characteristics while ignoring other variables. For example, Bezjian-Avery *et al.* (1997) compared two advertisement media (network and print) and ignoring broadcast media. Also Findlay (2001) in his research took only one variable (advertisement appeal) and compared the emotional vs. rational ads, while ignoring other variables. This research could be the first research to tackle the three main characteristics (media, component, and message).
2) This research suggests several practical recommendations that might help pharmaceutical companies to gain an understanding of know how to promote their drugs in the Jordanian context.

1.3 Research Objective

The key objective is to identify the influence of the characteristics of pharmaceutical drug advertising on the degree of physicians' acceptance in Jordan, and to identify the most important aspects of pharmaceutical advertising characteristics that affect the physicians' acceptance of the drug.

1.4 Literature Review

1.4.1 Advertising and Pharmaceutical Marketing

Percy Elliot defines advertising as "an indirect way of turning a potential customer towards the advertised product or service by providing information that is designed to effect a favorable impression, what we will call a positive brand attitude" (Percy Elliott, 2009). Pharmaceutical marketing is defined as a business of advertising or otherwise promoting the sale of pharmaceuticals or drugs (Mickey, C. Smith, *et al.*, 2002). The pharmaceutical marketing has a unique characteristics and problems. Smith, *et al* (2002) suggests that the decision-making step corresponds to the greatest difference between the pharmaceutical industry and others related to the production of goods for general use: in the case of pharmaceuticals, it is a third party (the physician) which decides the purchase, rather than customers themselves.

Another difference lies in the fact that the products of this industry themselves are unusual. While often they are helping save lives, they can also do harm if misused. Moynihan and Cassels (2005), in their book, "Selling Sickness: How Drug Companies Are Turning Us All Into Patients," believe that pharmaceutical advertising has become an "aggressive" advertising tool that is not just targeted at the sick but even more so at the healthy and well. Moynihan and Cassels also stated that the purpose of pharmaceutical advertising is to exploit the human beings fear of death, aging, and illness. Here, they used example of common complaints that were transformed into "frightening" conditions in the media: everyday sexual difficulties are seen as sexual dysfunction. Their argument is that pharmaceutical companies stand to enjoy greater profits if they can convince healthy people that they suffer from a sickness (Moynihan & Cassels, 2005). As a consequence, pharmaceutical marketing finds itself the most heavily regulated of any industry (Mickey C. Smith, *et al.*, 2002). Marketing plays a key role in influencing or directing activities from the manufacturer to the patient. It is the demand from the consumer that determines which goods will be produced. Any pharmaceutical company that wants to serve its market must endeavor in direct marketing activities so that they ensure the sale of the appropriate product in an appropriate quantity at an appropriate place and time (Paul Sherlock, 2010).

1.4.2 Direct to Consumer Advertising (DTCA)

DTCA is defined as the promotion of prescription drugs by pharmaceutical companies by means of mass media, for example: newspapers, magazines, television, and internet marketing that are directed at the general public (Abood & Brushwood, 1994). Barbara *et al.* (2003) investigated the effect of DTCA on prescription practices by conducting a questionnaire of physicians and patients in Sacramento (California) and Vancouver (British Columbia). Patients were asked to complete the questionnaire prior to their visit to the medical centre, while their physicians were surveyed immediately after the consultation. By directly comparing the results of a patient and his/her doctor, it was possible to determine which patients had been exposed to and influenced by DTCA, and whether this had an effect on the final prescription offered by the doctor. The doctors' confidence in the choice of treatment was also measured. The study found that a higher level of advertising resulted in greater requests for the advertised prescription, and an overall increase in the amount of medicine being prescribed. It was therefore concluded that if DTCA does result in dialogue between a doctor and patient regarding a treatment, the outcome is highly likely to be the prescribing of this treatment, regardless of the doctor's view of the potential benefits.

Another study by Andrew *et al.* (2006) examines the effect of DTCA for osteoarthritis drugs (Vioxx and Celebrex) on the prescribing behaviour of physicians. Interest in this field of medicine in particular was sparked by the withdrawal of Vioxx from the market in 2004. Vioxx was very widely advertised as a treatment for osteoarthritis, and there was concern that DTCA had a negative effect in this case. Andrew *et al.* analysed information from fifty-seven clinics over the period 2000-2002, and matched the data to advertising schedules from television stations, on a month-by-month basis. It was found that DTCA of both Vioxx and Celebrex increased the prescription of both drugs, particularly of Vioxx.

1.4.3 FDA Regulations

The FDA has been the key body which regulates drug advertisements since the Wiley Act of 1906. The effect of this was historically somewhat limited, however, as the agency's main power lay in ensuring that advertising did not affect other companies, rather than potential harming consumers (Francis B. Palumbo, and C. Daniel Mullins, 2002).

In 1997, the FDA set the guidelines on DTCA presented in Table 1. This was a significant modification in policy, and greatly increased the feasibility of the advertising of prescription drugs over broadcast media. As a result, there was a significant increase in pharmaceutical advertisements in the media (FDA 1997). For example, one study identified that DTCA contributed to a 12% increase in the sales of prescription drugs over the two-year period of 1999 to 2000 (Rosenthal et al., 2003).

Table 1. FDA guidelines on direct to consumer drug advertisement

Broadcast advertisements	Print advertisements
Major statements must disclose a product's major risk and most commonly-occurring adverse effects in either the audio or audio and visual part of the presentation. In place of a brief summary, advertisements may make "adequate provision" for dissemination of package labeling with four alternative sources of information: 1-Toll-free telephone number. 2-Referral to a print advertisement in a concurrently running print publication, or provision of enough brochures, with required product information, in convenient outlets. 3-Referral to a health care provider. 4-Internet web page address.	Advertisements must disclose each side effect, warning, precaution and contraindication from the approved patient labeling that focuses on the most serious risks and less serious, but most frequently occurring, adverse reaction is also acceptable. The latter must include: 1-All contraindications. 2-All warnings. 3-Major precaution, including ant that describe serious adverse events. 4-The 3-5 most common non-serious adverse reactions most likely to affect the patient's quality of life or compliance with drug therapy.

Source: FDA, 1997.

1.4.4 Pharmaceutical Drug Advertising Characteristics

Advertisement media: There are many forms of media available for advertises, from print media such as newspapers and magazines, through broadcast media such as radio and television. More recently, the internet has provided a new avenue for advertisement. Different groups of consumers will be more influenced by specific types of advertising which most closely relates to their most common form of media consumption, and

it is therefore important that advertising campaigns are correctly tailored (Megan L, 2005).

The internet and interactive media increase the complexity of this process (Belch, 2004). While at first glance the choices among these alternatives might seem relatively straightforward, this is rarely the case for the reason that different advertisement media have some advantages over others. Part of the reason media selection becomes so involved is the nature of the media themselves. TV combines both sight and sound, an advantage not offered by other media. Magazines can convey more information and may keep the message available to the potential buyer for a much longer time. Newspapers also offer their own advantages, as do outdoor, direct media, and each of the others. The Internet offers many of the advantages of other media but is also limited in its capabilities.

The characteristics of each alternative must be considered, along with many other factors (Belch, 2004). The internet as a medium for advertising has been explored at length by Hofmann and Novak (1996), who argue that while there are many similarities between magazines and websites, predominately in their dependence on text and pictures, the two media types also have many differences. Hofmann and Novak summaries these differences in three main categories: (1) the attitude of the potential consumer to the advertisement, (2) the complexity of the advertising material and (3) the material which is transmitted. One particularly important factor in advertising is the receptiveness of an individual consumer to advertising in general. In the case of print advertisements, it has been found that consumers who view advertising more favorably are able to recall the details of more advertisements one day after they view them (Metha, 2000). One of the most significant differences between print and internet advertisements lies in the fact that while magazines have a clear linear sequence (one page after the other), internet websites can be viewed and accessed through an infinite set of links. The internet user therefore has a much greater level of control over what is viewed compared to a print reader, who is therefore more likely to be exposed to advertisements, even if skimming the page. It is also believed that advertisements in the print media enable greater receptiveness as they can be physically touched and held, while information on the internet is viewed on a screen, which is seen as being more distant. These apparent advantages of print advertisements are likely to be offset by the relatively longer periods of time that people spend on the internet compared to reading print media, and it is likely that a combination of advertising in print and online will have the greatest effect (Bezjian, Avery et al., 1997).

An important new component of internet advertising lies in social media. Gupta and Udupa (2011) studied the two groups to whom pharmaceutical advertisements are directed-patients and doctors-and found that advertisements placed in social media had a strong influence on both groups, particularly the younger age brackets. The use of such media introduces new challenges, with the need to ensure confidentiality, and confirm reliability of information.

Long before the use of internet advertising, television proved to be a valuable marketing tool. Television is a unique and powerful advertising medium as it contains the elements of sight, sound, and motion to create a variety of advertising appeals and executions (Belch, 2004). Radio, in contrast, has a limited sense-appeal as it only contains the element of sound. Even very early studies confirmed the power of television advertising. Roper's survey (1973) reported that Americans viewed television to be the most credible form of mass media.

The selection of advertising medium is therefore not straightforward, with each form exhibiting its own advantages. Luo and Donthu (2001) examined the media spending choices of the top advertisers in the U.S. in 1998 to establish benchmarks for media selection decisions, finding that only nine of the sixty-three studied used their media budget efficiently. They also found that a higher spending on advertisements in the print media correlated to greater sales and incomes. Stafford et al. (2003) tested whether there was a relationship between average weekly unit sales and the type of advertising used. They analyze sales data provided by a franchiser for 121 weeks of pizza store sales for one metropolitan area from 1999-2001, and the advertising media used for each week. A regression analysis reveals that 63% of sales variability was explained by the media expenditure patterns. The average weekly sale without advertising was $10,696. The most powerful influence on sales was the concurrent use of primary direct mail and national television advertising, which resulted in a $1,057 increase in weekly sales.

Vakratsas and Ma (2005) examined the effect of media selection (magazine, network television or local television) on the monthly sales of competing brands of cars, taking into account the long-term effects of advertising. They use a lagged regression analysis of monthly sales (during the 1990s) for Ford Explorers and Jeep Grand Cherokees, with advertising expenditures as the predictor variables, and found that for both car types, magazine advertisements had a greater long-term impact than advertisements on network television, with local television advertisements being lest effective. The authors went on to predict that further increasing the

proportion of the advertising budget spent on magazines could improve sales.

To test the intermediate effects of advertising on consumers' cognition, Shyam et al. (1998) use a laboratory setting to assess the recall and recognition of online text advertisement versus the same advertisement in a newspaper. The online and print ads were both embedded in news stories. While no difference in recollection appeared for the news stories in each medium, those who had viewed the printed newspaper advertisement achieved higher recognition scores for its advertising content than those who received the online version.

One area of marketing related to health, but distinct from pharmaceuticals advertising, is campaigns against smoking. Many comprehensive studies in this area have drawn important conclusions regarding health advertising. In high income countries, it has been found that sustained television anti-smoking advertisements have had greatest effect in decreasing the rates of smoking (Pierce et al., 1998). In low to middle income countries, however, television advertising costs are much higher and the television ownership much lower, so such campaigns are likely to have less effect, with radio advertising a more effective medium. Indeed, even in the United States, it has been found that during working hours, radio reached more members of the population than television, particularly among smokers (Nelson et al., 2008). While radio advertisements require more planning and effort to have as powerful an effect as televised advertisements, it is nevertheless predicted to be worthy of future advertising efforts (National Cancer Institute, 2008). One recent study found that, on a cost basis, radio advertisements were twice as effective as print advertisements and over fifty times more effective than television advertisements in spreading the anti-smoking message (Davis et al., 2007).

1.5 Advertisement Component

1.5.1 Advertisement Language

The language of advertisements is an essential component to its effectiveness, whether the language, dialect, accent or even subtle nuances specific to a generational group. More recently, increasing numbers of migrants are causing new challenges, a problem which is being faced in many counties including the United States (Belch, 2004). The importance of language is likely to differ greatly with the target population. In Europe, for example, where amongst highly-educated there is a very high standard of English, it was found that there were no significant differences in the effects of advertisements in English and the national language (Shoham, 1996, Gerritsen et al., 2000, Gerritsen et al., 2007). In contrast, in South Korea, native Koreans responded much more positively to advertisements in Korean than in English, and were able to comprehend and remember the message much better (Puntoni et al., 2008, Ahn & La Ferle, 2008). A similar result was found for non-English examples: Dutch participants found it easier to comprehend French language advertisements where slogans were easy to understand (Hornikx & Starren, 2006). Adaptation of advertisements therefore appears to be the best strategy, but many products are advertised in a range of countries, and then a choice must be made of whether to standardize or adapt (Agrawal, 1995, Jos et al., 2010), with similar considerations to those discussed above.

1.5.2 Advertisement Appeal

The appeal of an advertisement will provide the initial impetus for a viewer to act (Manrai et al., 1992). Advertisement appeal can be classified as either rational or emotional, with a consumer choosing to act either because of an emotional or rational response (Stafford, 1993). Rational advertisement appeals are generally fact-rich, and are therefore preferred by advertisers. A number of studies have identified that information-rich advertisements are more effective than those that try to appeal to the emotional (Aaker & Norris, 1982, Golden and Johnson, 1983). This may be of particular importance in the marketing of pharmaceuticals, where the veracity of information is considered by consumers to be crucial. Indeed, it has been suggested that it is inappropriate to use emotional appeals when advertising pharmaceuticals, as they are so different from other consumer offerings (Findlay, 2001). This is in contrast to one study which measured the use of emotional appeals in medicinal drug advertisements at nearly 95% (Healy, 2007).

Unlike pharmaceutical advertisements, it is generally believed that anti-drug advertising is most effective when it appeals to emotions (Biener et al., 2001, Biener et al., 2004, Donohew et al., 1998). One primary form of emotional appeal is negative reinforcement, which is commonly employed in anti-drug and life insurance advertisements (Schiffman et al., 2010).

1.5.3 Advertisement Message

The most important aspect of an advertisement message is its credibility; how reliable and objective the information being presented is considered by the viewer (Solomon, 2002, Belch, 2004). It is believed that if a message is more credible, the cognitive responses to it will be viewed more favorably (Petty & Cacioppo, 1986, Till & Busler, 1998). As well as the credibility of the message, the credibility of the company is also very

important in the consumer's response to an advertisement (Ohanian, 1990), and companies therefore spend large amounts of money advertising their firm as well as their individual products (Gregory, 1998).

Another important consideration in the advertisement message is the length of exposure: how frequently and for how long will a single advertisement be shown? While repetition is essential for emphasis, overexposure can decrease the responsiveness of viewers (Pechman & Stewart, 1988). One solution is to cycle through multiple advertisements which convey the same information, but with very different content (Christie, 1999).

2. Methods

2.1 Research Theoretical Framework

From this literature review and the research objectives, the following theoretical research model can be developed. Figure 1 shows the theoretical proposed relations between the research variables.

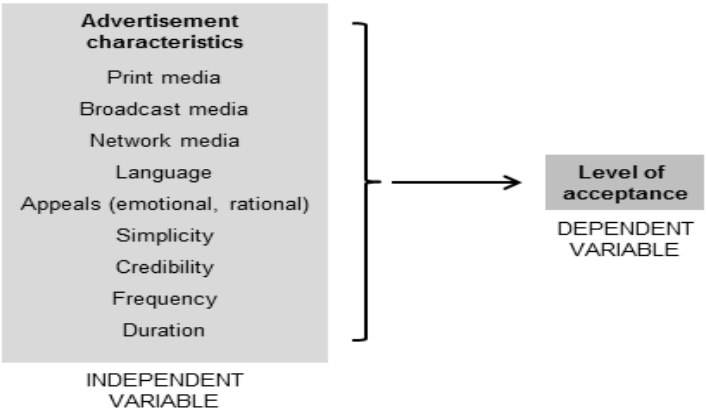

Figure 1. Theoretical research framework

2.2 Operational Definitions

The current research used different scales to measure the main variables (independent variables and dependent variables), scales used to measure the research constructs were drawn from the available literature, and are outlined in Table 2.

Table 2. Supported literature for measurement scales

Variables measurement	Supported literature	Variables
Independent variable:		
Measured by questions 1-3 in the questionnaire.	Adopted from Gallagher, *et al.*, 2001.	Print media
Measured by questions 4-5 in the questionnaire.	Adopted from Lee, 2009.	Broadcast media
Measured by question 6-7 in the questionnaire.	Adopted from Hoffman and Novak, 1996.	Network media
Measured by questions 8-11 in the questionnaire.	Adopted from Krishna and Ahluwalia, 2008.	Language
Measured by questions 12-23 in the questionnaire.	Adopted from Nam-Hyun Um, 2008.	Advertising appeal
Measured by questions 24-28 in the questionnaire.	Adopted from Alexander Hamilton Institute (U.S.); Johnson, Joseph French, 1853-1925.	Simplicity
Measured by questions 29-33 in the questionnaire.	Adopted from MacKenzie and Lutz, 1989.	Credibility
Measured by questions 34-35 in the questionnaire.	Adopted from Cacioppo, *et al.*, 1979	Frequency
Measured by questions 36-38 in the questionnaire.	Adopted from Daniel G. Goldstein et al, 2011.	Duration
Dependent variables:		
Measured by questions 39-44 in the questionnaire.	Adopted from Rajeev and Michael, 1986	Level of acceptance

2.2.1 Definition of the Independent Variable

Advertisement media: Categorizes the delivery systems into general groups such as print media, broadcast media, outdoor advertising, direct mail, and other support media (Belch, 2004).

Print media: Comprising newspapers and magazines that are printed for mass readership (Gallagher, *et al.*, 2001). Questions 1-3 were used to measure print media.

Broadcast media: Utilizes radio waves to transmit signals; most notably, radio and television (Lee, 2009). Questions 4-5 were used to measure broadcast media.

Network media: The internet provides a unique platform for interactions. Products can be purchased on demand, and very conveniently. The internet ranges from highly personalized emails to very general websites (Hoffman & Novak, 1996). Question 6-7 was used to measure network media

Language: Language in marketing and advertising is particular powerful in exerting an influence. International marketers, especially, must be pay careful attention to idiosyncratic connotations and ensure that translations are correct and inoffensive (Krishna & Ahluwalia, 2008). Questions 8-11 were used to measure advertisement language.

Advertising appeal: Is the basis or approach used in an advertising message to attract the attention or interest of consumers and/or influence their feelings toward the product or service. Advertising appeals, as discussed above, may be emotional or rational (Nam-Hyun Um, 2008). Questions 12-23 were used to measure advertisement appeal.

Simplicity: Advertisements must be attention-grabbing, but must also clearly convey the essential information. Potential customers will be lost if they do not understand the advertisement. A simple advertisement is therefore often the most effective (Alexander Hamilton Institute (U.S.), Johnson, Joseph French, 1853-1925). Questions 24-28 were used to measure advertisement simplicity.

Credibility: As discussed above, credibility is crucial to an advertisement's success (MacKenzie & Lutz, 1989). Questions 29-33 were used to measure advertisement credibility.

Frequency: It has been suggested that advertisements lose their efficacy after between three and ten repetitions (Cacioppo, *et al.*, 1979). Questions 34-35 were used to measure advertisement frequency.

Duration: Is defined as the length of exposure to the advertisement, and affects a viewer's ability to remember the content (Goldstein et al, 2011). Questions 36-38 were used to measure advertisement duration.

2.2.2 Definition of the Dependent Variable

Level of acceptance: Is the extent to which the physicians accept and prescribe the advertised drug based on the advertisement. Advertisement may be rejected if they appear to be false, misleading, illegal (Rajeev and Michael, 1986). Questions 39-44 were used to measure the level of acceptance.

2.3 Hypotheses

$H_{0.1}$: There is no statistically significant relationship between the characteristics of pharmaceutical drug advertising in Jordan and the degree of physicians' acceptance of these drugs.

This hypothesis can be divided into the following sub hypotheses:

$H_{0.1.1}$: There is no statistically significant effect of advertising through print media in Jordan on the degree of physicians' acceptance of the drugs.

$H_{0.1.2}$: There is no statistically significant effect of advertisement through broadcast media in Jordan on the degree of physicians' acceptance of the drug.

$H_{0.1.3}$: There is no statistically significant effect of advertisement through network media in Jordan on the degree of physicians' acceptance of the drug.

$H_{0.1.4}$: There is no statistically significant effect of advertisement language in Jordan on the degree of physicians' acceptance of the drug.

$H_{0.1.5}$: There is no statistically significant effect of advertisement appeal in Jordan on the degree of physicians' acceptance of the drug.

$H_{0.1.6}$: There is no statistically significant effect of advertisement simplicity in Jordan on the degree of physicians' acceptance of the drug.

$H_{0.1.7}$: There is no statistically significant effect of advertisement credibility in Jordan on the degree of

physicians' acceptance of the drug.

$H_{0.1.8}$: There is no statistically significant effect of advertisement frequency in Jordan on the degree of physicians' acceptance of the drug.

$H_{0.1.9}$: There is no statistically significant effect of advertisement duration in Jordan on the degree of physicians' acceptance of the drug.

2.4 Research Methodology

2.4.1 Research Population

The population in this research is all physicians working in the private sector in Amman. According to the Jordanian Medical Association (JMA, 2010), the following represent the twenty one physician's specialties: General practitioner, Surgeon, Internist, Gynecologist, Pediatrics, Ophthalmologist, Orthopedic, E.N.T. Surgeon, Neurosurgery, Cardiology, Psychiatry, Dermatologist, G.I.T. Specialist, Urologist, Laboratory, Family, Physiotherapy, Anesthetics, Diagnostic radiology, Chest medicine, Plastic surgeon, Five specialties (plastic surgeon, diagnostic radiology, anesthetics, physiotherapy and laboratory) were excluded from the research population because they are not involved in drug prescription and thus counteract the research purpose. The total number of physicians working in private sector in Amman after specialty exclusion was 2854. According to Zikmund (2003) the sample size should be 5% of the population, the researcher increase the sample size (7% of the population) to reduce sample error.

$$n= .05*2854 =143 \quad (1)$$

$$n= .07*2854 =200 \quad (2)$$

2.4.2 Research Sample

The researchers disseminated 200 questionnaires within that 16 specialty upon key respondents (unit of analysis) who are physicians. The questionnaires were distributed by the researchers for all key respondents and follow up them to insure gathering the highest number of respondents.

In this research, a survey based device involving a self completion questionnaire will be used for gathering data. The questionnaire will be used in this empirical work for exploring and gathering the relevant information to answer the research questions. It will be represented by using the 5-points likert scale questionnaire. For each variable, a set of questions were adopted from another researchers to operationalize the research construct. The five point likert scale used in this research, where (1) represents "strongly disagree", (2) represents" disagree", (3) represents "neutral", (4) represents "agree", and (5)represents "strongly agree".

2.4.3 Data Collection Instrument

Questionnaire is the data collection instrument which the researcher used to collect responses from the research sample. The questionnaire was originally designed and distributed in English, and then it was translated to Arabic.

The final questionnaire has been developed through several stages:

1) Exploration the literature which discuss the main variables in order to specify the most appropriate independent and dependent variables and their scales.
2) Preliminary questionnaire was designed and presented to academic specialists who have knowledge about the topic.
3) After modifications have been done, a pilot study was performed by disseminating questionnaire upon some physicians. That test was followed by some modifications.
4) The questionnaires were finally distributed in English to research sample after making all required modifications.

2.4.4 Components of Questionnaire

The questionnaire starts with a letter to identify the purpose of the research which might lead to increase response rate and answers reliability, in addition to asking respondents kindly to be cooperative in fulfilling the questionnaire subjectively, then appreciating respondents' efforts. After that, the questionnaire consists of two main parts:

1) The first part represents the demographic variables of the physicians which are: gender, age and educational level.

2) The second part consists of 44 questions to cover all main variables of this research. Table 3 shows the second part components.

Table 3. The second part components of the questionnaire

Question Number	*The Variable*
Independent variables	
1-3	*Print media*
4-5	*Broadcast media*
6-7	*Network media*
8-11	*Language*
12-23	*Advertising appeal*
24-28	*Simplicity*
29-33	*Credibility*
34-35	*Frequency*
36-38	*Duration*
Dependent variable	
39-44	*Level of acceptance*

2.4.5 Data Analysis Techniques

Before starting data analysis, the researcher coded the collected data, so that computer could understand that form. The data has been analyzed using SPSS V.17 program. The researchers used different descriptive and inferential statistical techniques to analyze data which are:

Descriptive statistics to describe the sample characteristics by using: frequency, percent, mean, and standard deviation.

Inferential statistics to measure the correlations between independent variables and dependent variables, in order to test the research hypotheses by using mainly multiple regression analysis.

2.4.6 Validity and Reliability of Scales

1) **Validity of Scales:** The researchers disseminated the research questionnaire in Arabic and English languages attached with the research problem, objectives, theoretical framework, hypotheses, and operational definitions upon a number of academic people who have a knowledge about the research topic to assess the ability of the questionnaire to measure what it is supposed to measure, that is, to ascertain the validity of the research instrument, then that group of academic people presented their feedback which resulted in a minor modifications.

2) **Pilot Study:** Pilot study is a mini version of a full- scale study (feasibility of study). In addition, it is a pre-testing of a research instrument like a questionnaire. It is important to note that performing a pilot study does not secure research success, but it increases the probability of success (Teijlingen and Hundley, 2001). The researchers performed a pilot study with 20 physicians from the research sample. The researcher met the physicians, then disseminating the research questionnaire to discuss all its items with physicians and asking them to give their feedback after fulfilling questionnaires to identify unnecessary, difficult or ambiguous questions.

The researchers conducted a pilot study:

(i) To check the feasibility of the research.

(ii) To avoid wasting time and money on an inappropriate designed research as much as possible.

(iii) To improve the questionnaire design by eliminating or adjusting unnecessary, difficult or ambiguous questions, according to physician's feedback.

(iv) To check that each question is understood as the researcher wants.

(v) To estimate the time taken to fulfill the questionnaire in order to decide if it is reasonable.

2.4.7 Reliability of Scales

A measure is reliable when you get similar results over time and across situations (Zikmund, 2003). More specifically, reliability is the extent to which a research measures are free from error and yield consistent results

(Peter, 1979). Repeatability and internal consistency are the two dimensions which underlie the reliability construct (Zikmund, 2003). Cronbach's alpha is a measure of internal consistency, which indicates how closely related a set of items or as a group. It is used to estimate the proportion of variance that is systematic or consistent in a set of test scores. Cronbach's alpha is not a statistical test; rather it is a coefficient of reliability or consistency.

Cronbach's alpha reliability coefficient normally ranges between 0 and 1. The closer Cronbach's alpha coefficient is to 1 the greater the internal consistency of the items in the scale. Table 4 showed Cronbach's Alpha values, all values are greater than (0.60) which is good because it is greater than the accepted percent (0.60). These results mean that the internal consistency reliability was good and acceptable and can be considered to be reliable to achieve the research objectives.

Table 4. Reliability statistics

Variables	Number of Items	Cronbach Alpha
Print Media	3	0.700
Broadcast Media	2	0.642
Network Media	2	0.794
Language	4	0.677
Appeal (emotional)	8	0.913
Appeal (rational)	4	0.936
Simplicity	5	0.760
Credibility	5	0.716
Frequency	2	0.835
Duration	3	0.812
Level of acceptance	6	0.968
Total	44	

3. Results

3.1 Data Analysis

This chapter consists of four sections. The first two sections present the descriptive analysis of the demographic data and the research's variables. The third section presents the hypotheses testing and the results discussion. The final section demonstrates multicollinearity analysis. Before starting the analysis, it is important to know that a total number of 200 questionnaires were distributed by hand. 192 questionnaires were returned, and checked to detect if there were any missed data. The final number of acceptable questionnaires was 184 with a response rate of 92%. Data collection took 40 days.

3.1.1 Descriptive Analysis of Demographic Data

Table 5. The frequency distribution of demographic characteristics

Demographic	Frequency	Percentage
Gender		
Male	149	81
Female	35	19
Age		
From 25-less than 35.	12	6.5
From 35-less than 45.	41	22
From 45-less than 55.	62	33.5
55 and over	69	38
Education		
General practitioner	118	64.1
Specialist	31	16.9
Subspecialist	24	13
Consultant	11	6
Total	184	100

Table 5 shows that 81% of physicians in Amman are males, while females represent only 19%. Males represented the majority of the research sample; this conclusion is consistent with the JMA (2010) which states that 77.6 is the percentage of Jordanian male physicians work in Amman compared with the percentage of 22.4 of females. It also shows that the percentage of physicians between the age 55 and over was 38% (the highest percentage) followed by the category of 45-55 with the percentage of 33.5% and then Sum of those percentages equals 71.5 (38.0+ 33.5) this remarkable difference may be due to the nature of the research sample which have been collected from physicians in their clinic. The normal age for physicians to open a clinic from my experience is above 40. Based on the findings in the same Table 6 which related to the physicians educational level, the highest percentage of 118 (64.1) was for general practitioner category and the lowest percentages were 11 (6) for consultant. This conclusion is consistent with the JMA (2010) which states that 62.7 is the percentage of Jordanian general practitioner work in Amman.

3.1.2 Descriptive Analysis of Research's Variables

In this section descriptive statistics were computed for all research variables. Means, standard deviation, impact and rank relative to other items will be presented in order to give a feel for the data and its direction. Data collected at this research were scaled as shown in Table 6.

Table 6. Questionnaire scale

Strongly Disagree	Disagree	Neutral	Agree	Strongly Agree
(1)	**(2)**	**(3)**	**(4)**	**(5)**

Note: The researchers considered (3) as the mean of the scale (1+2+3+4+5/5), which means that 3 represents a medium level, less than 3 is a low level, and greater than 3 is a high level (this applied for all research scales).

3.1.3 Descriptive Analysis of Print Media

Table 7 shows that the mean score of the print media dimension was (2.75) with a standard deviation of (0.9). This low score on print media scale means that the level of physicians' acceptance is not highly affected by print media. Print media subscale consist of (3) items. Item number 3 (I find pharmaceutical advertisements very effective through brochures) had the highest mean (3.72) with a standard deviation of (0.95). While item number 2 (I find pharmaceutical advertisements very effective through newspapers) had the lowest mean (2.10) with a standard deviation of (0.72).

Table 7. Means, standard deviation, rank and impact for respondents' answers on print media items

Num	Item	Mean	S.D	Rank	Impact
1	I find pharmaceutical advertisements very effective through magazines.	2.44	1.02	2	**Low**
2	I find pharmaceutical advertisements very effective through newspapers.	2.10	0.72	3	**Low**
3	I find pharmaceutical advertisements very effective through brochures.	3.72	0.95	1	**High**
Total		**2.75**	**0.9**		**Low**

3.1.4 Descriptive Analysis of Broadcast Media

Table 8 shows that the mean score of the broadcast media dimension was (2.69) with a standard deviation of (0.95). This low score on broadcast media scale means that the level of physicians' acceptance are not highly affected by broadcast media and also they affected by broadcast media lower than print media. Broadcast media subscale consist of (2) items. Item number 5 (I find pharmaceutical advertisements very effective through television) had the highest mean (3.3) with a standard deviation of (1.1). While item number 4 (I find pharmaceutical advertisements very effective through radio) had the lowest mean (2.08) with a standard deviation of (.08).

Table 8. Means, standard deviation, rank and impact for respondents' answers on broadcast media items

Num	Item	Mean	S.D	Rank	Impact
4	I find pharmaceutical advertisements very effective through radio.	2.08	0.08	2	**Low**
5	I find pharmaceutical advertisements very effective through television.	3.3	1.1	1	**High**
Total		**2.69**	**0.95**		**Low**

3.1.5 Descriptive Analysis of Network Media

Table 9 shows that the mean score of the network media dimension was (4.035) with a standard deviation of (0.8). This high score on network media scale means that the level of physicians' acceptance is highly affected by network media. Network media subscale consist of (2) items. Item number 7 (I find pharmaceutical advertisements very effective through direct e-mail) had the highest mean (4.1) with a standard deviation of (0.76). While item number 6 (I find pharmaceutical advertisements very effective through Internet websites) had the lowest mean (3.97) with a standard deviation of (0.83).

Table 9. Means, standard deviation, rank and impact for respondents' answers on network media items

Num	Item	Mean	S.D	Rank	Impact
6	I find pharmaceutical advertisements very effective through Internet websites.	3.97	0.83	2	**High**
7	I find pharmaceutical advertisements very effective through direct e-mail.	4.1	0.76	1	**Low**
Total		**4.035**	**0.80**		**High**

3.1.6 Descriptive Analysis of Advertisement Language

Table 10 shows that the mean score of advertisement language dimension was (3.92) with a standard deviation of (0.81). This high score on advertisement language scale shows that the language plays a major role in drugs acceptance. Also, it means that the level of physicians' acceptance is highly affected by advertisement language. Advertisement language subscale consist of (4) items. Item number 8 (I think that the language used in pharmaceutical advertisement is clear) had the highest mean (4.07) with a standard deviation of (0.67). While item number 9 (I think that the English slogan used in pharmaceutical advertisement is clear) had the lowest mean (3.97) with a standard deviation of (0.79). The mean of English slogan (3.8) and Arabic slogan (3.91) are almost the same, which is in agreement with Gerritsen et al.'s (2007) finding of insignificant differences between the effects of advertisements in English and in a native language.

Table 10. Means, standard deviation, rank and impact for respondents' answers on language items

Num	Item	Mean	S.D	Rank	Impact
8	I think that the language used in pharmaceutical advertisement is clear.	4.07	0.67	1	**High**
9	I think that the English slogan used in pharmaceutical advertisement is clear.	3.8	0.79	4	**High**
10	I think that the Arabic slogan used in pharmaceutical advertisement is clear.	3.91	0.85	2	**High**
11	I think that the presence of conversation in advertisement is important.	3.9	0.92	3	**High**
Total		**3.92**	**0.81**		**High**

3.1.7 Descriptive Analysis of Advertisement Appeal

Table 11 shows that the mean score of advertisement appeal dimension was (3.4) with a standard deviation of (0.92). This high score on advertisement appeal scale shows that the advertisement appeal, especially the rational, plays a major role in drugs acceptance. Advertisement appeal subscale consists of (12) items. Item number 23 (I like the presence of detailed information about the drug use in the advertisement) had the highest

mean (4.55) with a standard deviation of (0.55). While item number 17 (I find the use of comedies in advertisement is effective) had the lowest mean (2.00) with a standard deviation of (0.83).

Table 11. Means, standard deviation, rank and impact for respondents' answers on appeals items

Num	Item	Mean	S.D	Rank	Impact
12	I feel that the use of emotional message in advertisement is effective.	3.42	0.94	8	**High**
13	I feel that the use of sexual appeal in advertisement is effective.	2.47	0.82	10	**Low**
14	I find disease awareness advertisement will create unnecessary fear.	3.18	0.899	9	**High**
15	I find the use of music in advertisement is effective.	2.44	0.94	11	**Low**
16	I find the use of animation in advertisement is effective.	3.66	1.39	7	**High**
17	I find the use of comedies in advertisement is effective.	2.00	0.83	12	**Low**
18	I feel that colorful pharmaceutical advertisements attract my attention.	3.68	1.02	6	**High**
19	I find that Pharmaceutical advertisements are interesting when a picture appears in it	3.97	0.94	3	**High**
20	I like the presence of detailed information about side effect in the advertisement.	3.92	1.10	4	**High**
21	I like the presence of detailed information about the disease in the advertisement.	4.40	0.55	2	**High**
22	I like the presence of detailed information about the efficacy in the advertisement.	3.91	1.09	5	**High**
23	I like the presence of detailed information about the drug use in the advertisement.	4.55	0.55	1	**High**
	Total	**3.4**	**0.92**		**High**

3.1.8 Descriptive Analysis of Advertisement Simplicity

Table 12 shows that the mean score of advertisement simplicity dimension was (3.52) with a standard deviation of (0.70). This high score on advertisement simplicity scale shows that the advertisement should be simple in order to be accepted.

Advertisement simplicity subscale consist sof (5) items. Item number 27 (I find the information inside the advertisement is clear) had the highest mean (4.09) with a standard deviation of (0.40). While item number 26 (I find that pharmaceutical advertisements lack important information) had the lowest mean (2.75) with a standard deviation of (0.70).

Table 12. Means, standard deviation, rank and impact for respondents' answers on simplicity items

Num	Item	Mean	S.D	Rank	Impact
24	In pharmaceutical advertisement, I think they use simple medical terms.	3.93	0.57	2	**High**
25	I feel that pharmaceutical advertisements are simple and clear to all education level.	3.61	0.92	3	**High**
26	I find that Pharmaceutical advertisements lack important information.	2.75	0.70	5	**Low**
27	I find the information inside the advertisement is clear.	4.09	0.40	1	**High**
28	I like the advertisement to be read rapidly.	3.22	0.91	4	**High**
Total		**3.52**	**0.70**		**High**

3.1.9 Descriptive Analysis of Advertisement Credibility

Table 13 shows that the mean score of advertisement credibility dimension was (3.69) with a standard deviation of (0.81). This high score on advertisement credibility scale shows that credibility is an important in the advertisement because we are dealing with life saving drugs rather than normal goods. Advertisement credibility subscale consist of (5) items. Item number 29 (I find the information inside the advertisement is credible) had the highest mean (3.96) with a standard deviation of (0.55). While item number 32 (I find that the actors selected in the advertisement are credible) had the lowest mean (3.49) with a standard deviation of (0.69).

Table 13. Means, standard deviation, rank and impact for respondents' answers on credibility items

Num	Item	Mean	S.D	Rank	Impact
29	I find that the information inside the advertisement is credible.	3.96	0.55	1	**High**
30	I feel that pharmaceutical advertisements are misleading.	3.54	0.87	3	**High**
31	I find that the source of information in advertisement is credtible.	3.52	0.93	4	**High**
32	I find that the actors selected in the advertisement are credible.	3.49	0.69	5	**High**
33	The information in the advertisement should be presented without exaggeration.	3.96	1.00	2	**High**
Total		**3.69**	**0.81**		**High**

3.1.10 Descriptive Analysis of Advertisement Frequency

Table 14 shows that the mean score of advertisement frequency dimension was (3.50) with a standard deviation of (1.07). This high score on advertisement frequency scale shows that the repetition of the advertisement is quite important to retrieve the trade name when the physicians prescribe the drugs. Advertisement frequency subscale consist of (2) items. Item number 35 (I feel that the advertisement still effective after ten times exposure) had the highest mean (3.63) with a standard deviation of (1.19). While item number 34 (I feel that the advertisement effective within three times exposure) had the lowest mean (3.36) with a standard deviation of (0.95).

Table 14. Means, standard deviation, rank and impact for respondents' answers on frequency items

Num	Item	Mean	S.D	Rank	Impact
34	I feel that the advertisement effective within three times exposure.	3.36	0.95	2	**High**
35	I feel that the advertisement still effective after ten times exposure.	3.63	1.19	1	**High**
Total		**3.5**	**1.07**		**High**

3.1.11 Descriptive Analysis of Advertisement Duration

Table 15 shows that the mean score of advertisement duration dimension was (3.24) with a standard deviation of (0.85). This high score on advertisement duration scale shows that the length of the advertisement affect the level of acceptance in a way that the shorter ads will be accepted more than the long one. Advertisement duration subscale consist of (3) items. Item number 36 (I feel that advertisement has to be short) had the highest mean (4.28) with a standard deviation of (0.85). While item number 37 (I feel that advertisement has to be long) had the lowest mean (1.96) with a standard deviation of (0.79).

Table 15. Means, standard deviation, rank and impact for respondents' answers on duration items

Num	Item	Mean	S.D	Rank	Impact
36	I feel that advertisement has to be short.	4.28	0.85	1	**High**
37	I feel that advertisement has to be long .	1.96	0.79	3	**Low**
38	I feel that the length of the advertisement affect the quantity/quality of information included.	3.49	0.91	2	**High**
Total		**3.24**	**0.85**		**High**

3.1.12 Descriptive Analysis of Level of Acceptance

Table 16 shows that the mean score of level of acceptance dimension was (3.67) with a standard deviation of (0.90). This high score on level of acceptance scale shows that the physician's level of drug acceptance affected by pharmaceutical drug advertisement. Level of acceptance subscale consists of (6) items. Item number 42 (I usually use the advertised drug for myself) had the highest mean (3.88) with a standard deviation of (0.82). While item number 40 (I usually prescribe the advertised drug to my patients) had the lowest mean (3.48) with a standard deviation of (1.03).

Table 16. Means, standard deviation, rank and impact for respondents' answers on level of acceptance items

Num	Item	Mean	S.D	Rank	Impact
39	I have a positive attitude toward the advertised drug.	3.83	0.70	2	**High**
40	I usually prescribe the advertised drug to my patients.	3.48	1.03	6	**High**
41	I usually encourage my colleagues to prescribe the advertised drug.	3.64	0.95	4	**High**
42	I usually use the advertised drug for myself.	3.88	0.82	1	**High**
43	I have no reservations toward the advertised drugs.	3.70	0.89	3	**High**
44	I highly recommend the drug companies to advertise through different media.	3.50	1.02	5	**High**
Total		**3.67**	**0.90**		**High**

3.2 Multicollinearity Analysis

Table 17. Collinearity statistics[a]

Model 1	Collinearity Statistics	
	Tolerance	VIF
Print	.546	1.832
Broadcast	.242	4.126
Network	.226	4.428
Language	.361	2.771
Appeal	.101	9.916
Simplicity	.181	5.539
Credibility	.116	8.641
Frequency	.148	6.739
Duration	.181	5.522

a. Dependent Variable: acceptance.

Multicollinearity is a statistical phenomenon in multiple regression analysis. It emerges when one or more of the independent variable(s) is (are) highly correlated with one or more of other independent variables. Multicollinearity arises if there is a high level of correlation (either positive or negative) between two or more independent variables. Tolerance and Variance Inflation Factor (VIF) are the most widely used measures to

assess multicollinearity. Tolerance is the proportion of variance in the independent variable which is not explained by its relationships with the other independent variables. According to Hair *et al.* (2003), the minimum cutoff value for tolerance is typically (0.10), that is, a tolerance value less than 0.10 should be investigated further. Variance Inflation Factor (VIF) measures how much the variance of the regression coefficients is inflated by multicollinearity problems. To assess that value, there are 2 criteria, one more relaxed and the other more conservative. More conservatively, it is favorable that (VIF) values be lower than 5, on the other hand a more relaxed criterion is that they be lower than 10 (Hair *et al.*1987; Kline, 1998). For this research, the researcher depends on the rule of thumb which suggests that if the (VIF) values are greater than 10, then there is a multicollinearity problem (more relaxed criterion).

The multicollinearity test for the nine pharmaceutical drug advertisement characteristics (print media, broadcast media, network media, advertisement language, advertisement appeal, advertisement simplicity, advertisement credibility, advertisement frequency and advertisement duration) were accomplished and all (VIF) values were less than (10), and tolerance values were more than (0.10) as shown in Table 17. So that, there is no collinearity within collected data, which in result reinforced the model by avoiding the problem of having interchangeable beta values between independent variables and then there was no bias.

3.3 Inferential Statistics: Testing Hypotheses

Multiple linear regression analysis was used to test the research main hypothesis of this research. Multiple regression enables researcher to examine the effect of many different factors (independent variables) on certain outcome (dependent variable) at the same time. The general goals behind using the multiple regression method were to learn more about the relationship between several independent variables and a dependent variable, also to investigate the functional relationships between independent and dependent variables, in order to understand what might be causing the variation in the dependent variable.

At the beginning, the researcher used the model summary (Table 18) and the analysis of variance (ANOVA; Table 19) to assess the model fit and its overall significance in order to test the main hypothesis of this research.

3.3.1 The Main Hypothesis

$H_{0.1}$: There is no statistically significant relationship between the characteristics of pharmaceutical drug advertising in Jordan and the degree of physicians' acceptance of these drugs.

Table 18. Model summery

Model	R	R Square	Adjusted R Square	Std. Error of the Estimate
1	.960[a]	.922	.918	1.38992

a: Predictors: (Constant), print, broadcast, network, language, appeal, simplicity, credibility, frequency, duration.

Table 19. ANOVA to ensure the fit of the model to test $H_{0.1}$[b]

Model	Sum of Squares	df	Mean Square	F	Sig.	Model
Regression	3959.934	9	439.993	227.753	.000[a]	Regression
Residual	336.148	174	1.932			Residual
Total	4296.082	183				Total

b: Predictors: (Constant), print, broadcast, network, language, appeal, simplicity, credibility, frequency, duration.

The correlation coefficient R is a statistical technique which shows whether and how strongly pairs of variables are related to each other, here the correlation coefficient is R=0.960, which means that there is a strong correlation between the characteristics of pharmaceutical drug advertising in Jordan and the degree of acceptance of these drugs. On the other hand, coefficient of determination (R square) presents the proportion of the variation in the dependent variable explained by the regression model. Here in this research, R square=.922 which means that 92.2% of the variability of the level of acceptance has been explained by the characteristics of pharmaceutical drug advertising dimensions, it indicates to the goodness of fit of the research model. Adjusted R square value of this research equals .918 which is very similar to R square value=.922, since adjusted R square values always less than or equal R square, it means that if the model has been fitted when the whole population participates rather than those who responded in the research, there will be .004 (.922-.918) less variance in the

model outcome. Adjusted R square is typically utilized as a most accurate measure of goodness of fit than R square.

It is clear that F-value for the collected primary data was 227.753 which is significant at the level of α <0.05 (sig. =.000). Consequently, the researchers rejected the main null hypothesis and accepted the main alternative hypothesis which means that there is a statistically significant effect of the characteristics of pharmaceutical drug advertising in Jordan on the degree of acceptance of these drugs.

Table 20. Results of multiple regression analysis [a]

Model 1		Unstandardized Coefficients		Standardized Coefficients		
		B	Std. Error	Beta	T	Sig.
1	(Constant)	-13.248	9.775		-1.355	.177
	Print	.087	.055	.046	1.590	.114
	Broadcast	.518	.122	.182	4.235	.000
	Network	.406	.147	.123	2.761	.006
	Language	.210	.074	.101	2.849	.005
	Appeal	.015	.039	.026	.389	.698
	Simplicity	.068	.093	.036	.729	.467
	Credibility	.113	.084	.084	1.353	.178
	Frequency	.36	.281	.070	1.278	.203
	Duration	1.248	.111	.561	11.252	.000

a: Dependent Variable: Acceptance.

Table 20 started with an estimation of beta for each independent variable of this research, and provides measurements of how much each variable contributes to the model. A large beta therefore correlates to a large effect. Advertisement duration, broadcast media and network media represented the highest beta values which were 0.561, 0.182, and 0.123 respectively. While advertisements appeal, advertisement simplicity and print media represented the lowest beta values which were 0.026, 0.036, and 0.046 respectively. So that advertisement duration, advertisement language and broadcast media have the highest contributions in the research model.

The second part of Table 20 demonstrated t and sig. values, which estimate the impact of each variable. Large (t) values and small (α) values suggest a greater effect of the predictor variable on the criterion variable. The researcher depended on the significant level of each variable to test the research sub- hypotheses.

3.3.2 The Sub-Hypotheses

Table 21 summarizes the results of sub-null hypotheses. Based upon the decision rule is to reject the sub- null hypotheses if the significant level is equal to or less than 0.05, and then to accept the sub- alternative hypotheses. The results showed that some of these sub-hypotheses n were accepted and others were rejected. The sub-hypotheses no. 11, 1.5, 1.6, 1.7, 1.7, and 1.8 were accepted and the other sub-hypotheses no.1.2, 1.3, 104, and 1.9 were rejected. The accepted sub-hypotheses mainly related to the advertising through print media,, advertising appeal, advertising simplicity, advertising credibility and advertising frequency, while the rejected sub-hypotheses mainly related advertising through broadcast media, advertising through network, advertising language and advertising duration.

Table 21. Summary of the results of hypotheses tests

Hypotheses	Decision	Conclusion
$H_{0.1}$	Reject	There no a statistically significant relationship between the characteristics of pharmaceutical drug advertising in Jordan and the degree of acceptance of these drugs.
$H_{0.1.1}$	Accept	There is no statistically significant effect of advertising through print media in Jordan on the degree of physicians' acceptance of the drugs.
$H_{0.1.2}$	Reject	There is a statistically significant effect of advertisement through broadcast media in Jordan on the degree of physicians' acceptance of the drug.
$H_{0.1.3}$	Reject	There is a statistically significant effect of advertisement through network media in Jordan on the degree of physicians' acceptance of the drug.
$H_{0.1.4}$	Reject	There is a statistically significant effect of advertisement language in Jordan on the degree of physicians' acceptance of the drug
$H_{0.1.5}$	Accept	There is no statistically significant effect of advertisement appeal in Jordan on the degree of physicians' acceptance of the drug
$H_{0.1.6}$	Accept	There is no statistically significant effect of advertisement simplicity in Jordan on the degree of physicians' acceptance of the drug
$H_{0.1.7}$	Accept	There is no statistically significant effect of advertisement credibility in Jordan on the degree of physicians' acceptance of the drug
$H_{0.1.8}$	Accept	There is no statistically significant effect of advertisement frequency in Jordan on the degree of physicians' acceptance of the drug
$H_{0.1.9}$	Reject	There is a statistically significant effect of advertisement duration in Jordan on the degree of physicians' acceptance of the drug

4. Conclusions

The main findings of this study are summarized as follows:

1) The pharmaceutical drug advertising was found to have a significant effect on the degree of physicians' acceptance of these drugs. This result is consistent with the previous studies results such as Barbara, et al. (2003).

2) While the pharmaceutical drug advertisement through print media was not found significantly affect the level of physicians' acceptance of drugs, the advertisement through broadcast and network media has a major influence on the level of physicians' acceptance of drugs, this result is consistent with Stafford, et al. (2003) result, which conclude that the most powerful influence on sales was the media combination of primary direct mail and national TV advertising, which resulted in a $1,057 increase in weekly sales.

3) The advertisement through broadcast media was found to be the most influential media on the level of physicians' acceptance hence their beta value (.182) is the highest among different advertisement media. This result is consistent with the Roper (1973) survey which concluded that television is considered by Americans to be the most believable of all mass media.

4) The degree of physicians' drug acceptance was also influenced directly by the advertisement language. Arabic language has a major effect on this acceptance. This result is consistent with the Puntoni, et al. (2008) results that show that respondents perceive more emotion when the advertisement is in their local language than in English.

5) While the advertisement duration was to be the most influential advertisement component on the level of physicians' acceptance, the other component such as the advertisement appeal, simplicity, credibility and frequency were found not significantly influence the level of physicians' acceptance. Even though advertisement credibility, simplicity and frequency are quite important in the advertisement, this research is directed to physicians who already expect the credibility in any drug advertisements to be a given, since these are "life saving goods". So there is no relation with the level of acceptance.

6) The following Figure 2 illustrates the modified research theoretical framework according to the independent variables beta values. Each independent variable within characteristics of pharmaceutical drug advertisement construct is listed in a descending order to reflect its significance in implementing the level of physicians' acceptance. From this figure you can see the B value of advertisement duration has the highest value (.561) and the advertisement appeal has the lowest value (.026). In addition, the R value reflects a strong positive relationship between the characteristics of pharmaceutical drug advertisement and

the level of physicians' acceptance.

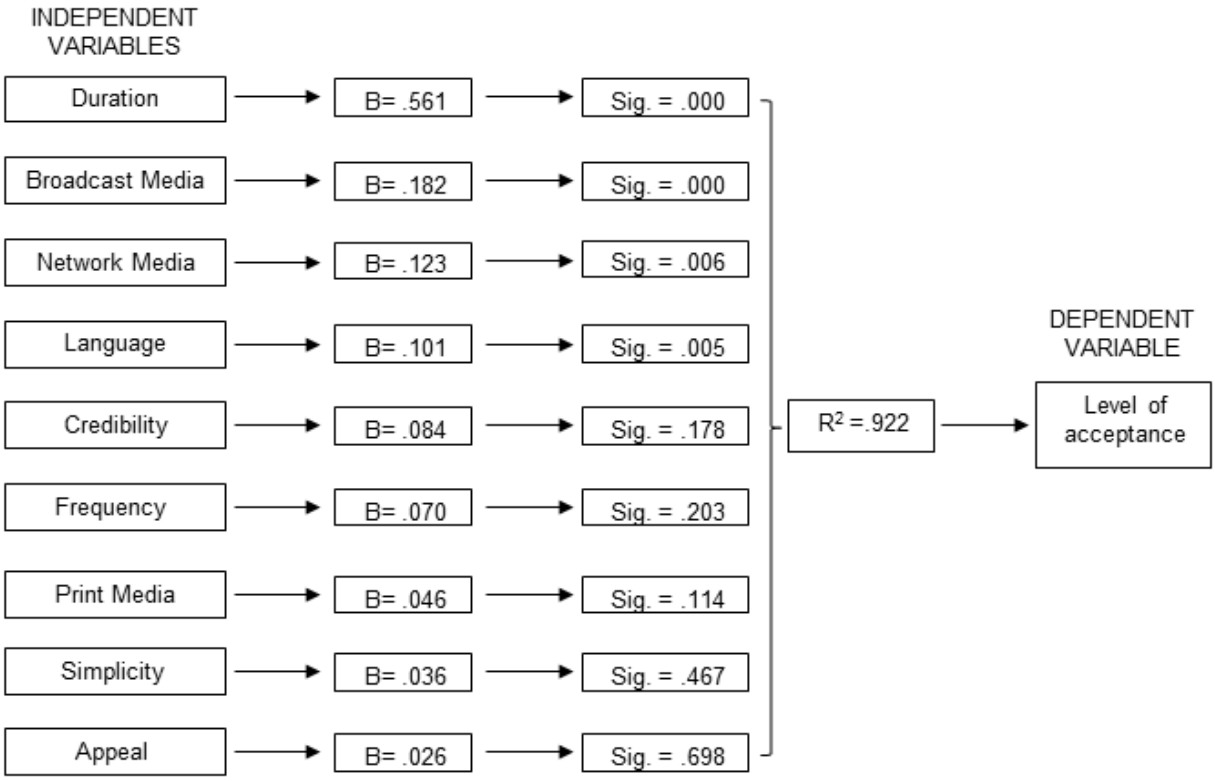

Figure 2. Modified research theoretical framework

4.1 Recommendations

Based on the findings of this research, there are several recommendations for marketing managers and sales and marketing departments in Jordanian pharmaceutical drug companies. These recommendations are:

1) The correlation between characteristics of pharmaceutical drug advertisement and the level of physicians' acceptance was reasonably high and positive R= .960 (Table 20). From a managerial perspective, it suggests that organizations should focus on different characteristics of pharmaceutical drug advertisement to increase the levels of physicians' acceptance finally to increase the prescription and sales.
2) Among the nine characteristics of pharmaceutical advertisement, advertisement duration has the greatest effect on the level of physicians' acceptance (Figure 2). Thus, pharmaceutical drug companies must be careful about the length of their advertisement: as demonstrated in Table 18, the mean of question 36 was 4.28, which indicates that the advertisement should be short.
3) Marketing managers at pharmaceutical companies should direct more of their effort capabilities toward advertising through broadcast and network media, which should increase the level of physicians' acceptance.
4) Marketing managers at pharmaceutical companies should avoid advertising through print media based on finding of this research.
5) To some extent, marketing managers at pharmaceutical companies should use rational rather than emotional appeals in their advertisements since the mean of rational questions (4.2) is greater than the mean of emotional questions (3.1).
6) English and Arabic slogans and conversation is quite important in pharmaceutical advertising and have a major effect on the level of physicians' acceptance, so marketing managers should implement them in their advertisements.

4.2 Marketing Implications

The characteristics of pharmaceutical advertising play major roles in changing the level of physicians' acceptance. Therefore, pharmaceutical company will be willing to maintain a continuous and diversified drug

advertisement through different media especially network media to ensure maintaining profitable business.

Pharmaceutical advertisements are the pathway for companies to alter physicians' acceptances accordingly changing their prescription behavior and finally to build a loyal physicians who are emotionally attached to a specific drug. Therefore, these loyal physicians will serve a reference for other physicians about the company's drugs and they will spread a positive word of mouth and this will save a lot of the company's cost. Accordingly, companies which concentrate on pharmaceutical advertisements will create a profitable business and healthy environment for their employees and customers (physicians), which will ensure a low turnover rate.

Furthermore, pharmaceuticals companies that take care of their physicians and treat them as assets will have strong positive image and high credibility in the market, which make it an attractive place for highly qualified physicians to prescribe the company's drugs. Finally pharmaceutical advertisement can help companies to differentiate themselves in the market.

References

Aaker, D. A., & Donald, N. (1982). Characteristics of TV Commercials Perceived as Informative. *Journal of Advertising Research*, *22*(2), 61-70.

Abood, R. R., & Brushwood, D. B. (1994). *Pharmacy Practice and the Law, Gaithersburg*. MD: Aspen Publishers.

Agrawal, M. (1995). Review of a 40-year debate in international advertising: Practitioner and academician perspectives to the standardization/adaptation issue. *International Marketing Review*, *12*, 26-48. http://dx.doi.org/10.1108/02651339510080089

Ahn, J., & La Ferle, C. (2008). Enhancing recall and recognition for brand names and body copy: A mixed-language approach. *Journal of Advertising*, *37*, 107-117. http://dx.doi.org/10.2753/JOA0091-3367370308

Alexander Hamilton Institute. (1853-1925). *Modern business* (Vol. 4). Johnson, Joseph French, New York.

Belch, E. G., & Belch, A. M. (2004). *Advertising and Promotion* (6th ed.). The McGraw-Hill companies.

Bezjian, A., Bobby, C., & Dawn, I. (1998). New media interactive advertising vs. traditional advertising. *Journal of Advertising Research*, *38*(4), 23-32.

Biener, L., & Taylor, T. M. (2002). The continuing importance of emotion in tobacco control media campaigns: a response to Hastings and Mac Fadyen. *Journal of Tobacco Control*, *11*, 76-77.

Cacioppo, J. T., & Richard, E. (1979). Effect of Message Repetition and Position on Cognition Response, Recall, and Persuasion. *Journal of Personality and Social Psychology, 37*(January), 97-109. http://dx.doi.org/10.1037/0022-3514.37.1.97

Daniel, G., Goldstein, R., Preston, M., & Siddharth, S. (2011). The Effects of Exposure Time on Memory of Display Advertisements.

Davis, K. C., Nonnemaker, J. M., & Farrelly, M. C. (2007). Association between national smoking prevention campaigns and perceived smoking prevalence among youth in the United States. *Journal of Adolescent Health*, *41*, 430-436. http://dx.doi.org/10.1016/j.jadohealth.2007.05.008

Donohew, L., Lorch, E., & Palmgreen, P. (1998). Applications of a theoretical model of information exposure to health interventions. *Journal of Human Communications Research*, *24*, 454-469. http://dx.doi.org/10.1111/j.1468-2958.1998.tb00425.x

Findlay, S. D. (2001). Direct-to-consumer promotion of prescription drugs: economic implications for patients. *Journal of Pharmaco Economics*, *19*(2), 109-119. http://dx.doi.org/10.2165/00019053-200119020-00001

Food and Drug Administration. (1997). Center for Drug Evaluation and Research, Draft Guidance for Industry on Consumer-Directed Broadcast Advertisements.

Food and Drug Administration. (2010). US Department of Health and Human Services, Drugs at FDA Glossary of Terms, USA. Retrieved from http://www.fda.gov/Drugs/informationondrugs/ucm079436.htm

Francis, B., Palumbo, C., Daniel, M. (2002). The Development of Direct-to-Consumer Prescription Drug Advertising Regulation, Journal of Food and Drug Law, Food and Drug Law Institute. Retrieved from http://www.kff.org/rxdrugs/loader.cfm?url=/commonspot/security/getfile.cfm&PageID=14372

Gallagher, K., Dale, K., & Jeffrey, P. (2001). The medium is not the message: Advertising effectiveness and content evaluation in print and on the web. *Journal of Advertising Research*, *41*(4), 57-70.

Gerritsen, M., Korzilius, H., Van Meurs, F., & Gijsbers, I. (2000). English in Dutch commercials: Not understood and not appreciated. *Journal of Advertising Research*, *40*, 17-31.

Golden, L. L., & Johnson, K. A. (1983). The Impact of Sensory Preferences and Thinking vs. Feeling Appeals on Advertising Effectiveness. *Journal of Advances in Consumer Research, Association for Consumer Research*, *10*, 203-8.

Gregory, J. R. (1998). *Trends in Corporate Advertising*. The Association of National Advertisers, Inc., New York.

Gupta, P., & Udupa, A. (2022). Social Media Marketing by Pharmaceutical Industry: Perception and Attitudes of Key Stakeholders. *Journal of Business and Economics Journal*.

Hair, J. F., Anderson, R. E., & Tatham, R. L. (1987). *Multivariate data analysis*. New York: Macmillan.

Hair, J., Babin, B., Money, A., & Samouel, P. (2003). *Essentials of business research Methods*. United state: Wily.

Healy, M. (2007). Direct, emotional ads for prescription drugs are everywhere. But they're just one way to get to the consumer. *Journal of Los Angeles Times*, *4*(3), 167-187.

Hoffman, D., & Novak, T. (1996). Marketing in hypermedia computer-mediated environments: conceptual foundations. *Journal of Marketing*, *60,* 50-68. http://dx.doi.org/10.2307/1251841

Hoffman, D. L., & Thomas, P. (1996). A New Marketing Paradigm for Electronic Commerce. *Journal of the Information Society*, *13*, 43-54.

Hornikx, J., & Starren, M. (2006). The relationship between the appreciation and the comprehension of French in Dutch advertisements. *Journal of Multilingual and Multicultural Development*, *28*, 204-219. http://dx.doi.org/10.2167/jmmd482.0

JMA. (2010). Retrieved from: http://www.jma.org.jo/

Jos, H., Frank, M., & Anja, B. (2010). English or a local language in advertising? The appreciation of easy and difficult 169- English slogans in the Netherlands. *Journal of Business Communication*, *47*(2), 188. http://dx.doi.org/10.1177/0021943610364524

Kline, R. B. (1998). *Principles and practice of structural equation modeling.* New York: The Guilford press.

Krishna, A., & Ahluwalia, R. (2008). Language choice in advertising to bilinguals: Asymmetric effects for multinationals versus local firms. *Journal of Consumer Research, 35,* 692-705. http://dx.doi.org/10.1086/592130

Lee, Al. (2009). Changing effects of direct-to-consumer broadcast drug advertising information sources on prescription drug requests. *Health Communication Journal*, *24*(4), 361-76.

Lois, B., Melanie, W., Cecilia, M., & Michael, S. (2008). How Broadcast Volume and Emotional Content Affect Youth Recall of Anti-Tobacco Advertising. *American Journal of Preventive Medicine*, *35*(1), 14-19. http://dx.doi.org/10.1016/j.amepre.2008.03.018

Lois, B., Ming, JI., Elizabeth, A., & Alison, B. (2004). The Impact of Emotional Tone, Message, and Broadcast Parameters in Youth Anti-smoking Advertisements. *Journal of Health Communication*, *9*, 259-274. http://dx.doi.org/10.1080/10810730490447084

Luo, X., & Donthu, N. (2001). Benchmarking advertising efficiency. *Journal of Advertising Research*, *4*(6), 7-18.

MacKenzie, S. B., & Lutz, R. J. (1989). An empirical examination of the structural antecedents of attitude toward the ad in an advertising pretesting context. *Journal of Consumer Marketing*.

Manrai, L. A., Broach, V. C., & Manrai, A. K. (1992). Advertising appeal and tone: Implication for creative strategy in television commercials. *Journal of Business Research, 25*, 43-58. http://dx.doi.org/10.1016/0148-2963(92)90004-U

Mickey, C. S., Bonnie, H. T., & Eugene, M. K. (2002). *Pharmaceutical marketing: principles, environment, and practice* (1st ed.). Pharmaceutical Products Press.

Moynihan, R., & Cassels, A. (2005). *Selling sickness: How drug companies are turning us all into patients* (1st ed.). Crows Nest: Allen & Unwin.

Nam-Hyun, Um. (2008). Revisit Elaboration Likelihood Model: How Advertising Appeals Work on Attitudinal

and Behavioral Brand Loyalty Centering Around Low vs. High Involvement Product. *European Journal of Social Sciences*, *7*(1).

National Cancer Institute. (2008). The Role of the Media in Promoting and Reducing Tobacco Use. National Cancer Institute, MD, USA: Bethesda.

Nelson, D. E., Gallogly, M., Pederson, L. L., Barry, M., McGoldrick, D., & Maibach, E. W. (2008). Use of consumer survey data to target cessation messages to smokers through mass media. *American Journal of Public Health*, *98*, 536-542. http://dx.doi.org/10.2105/AJPH.2006.090340

Ohanian, R. (1990). Construction and Validation of a scale to Measure Celebrity Endorsers Perceived Expertise, Trustworthiness, and Attractiveness. *Journal of Advertising*, *19*(3), 39-52.

Paul, S. (2010). Pharmaceutical Marketing: a Comparison of Deferent Markets. School of Chemical and Pharmaceutical Sciences Dissertations, unpublished doctoral dissertation, Dublin Institute of Technology.

Pechman, C., & David, W. S. (1988). Advertising Repetition: A Critical Review of Wearin and Wearout. In James, L., Claude, R., & Martin, Jr. (Eds.), *Journal of Current Issues and Research in Advertising*. Ann Arbor: University of Michigan.

Percy Elliott. (2009). *Economics Marketing Var, Strategic Advertising Management* (3rd ed.). Oxford university press, part1.

Peter, J. P. (1979). Reliability: A review of psychometric basis and recent marketing Practices. *Journal of Marketing Research*, 6-17. http://dx.doi.org/10.2307/3150868

Petty, R. E., & Cacioppo, J. T. (1986). Communication and persuasion: central and peripheral routes to attitude change. *Journal of Personality and Social Psychology*. New York: Springer-Verlag.

Pharmaceutical Research and Manufacturers of America. (2005). PhRMA DTC Guiding Principles. Retrieved from http://www.phrma.org/files/DTCGuidingprinciples.pdf

Pierce, J. P., Gilpin, E. A., Emery, S. L., White, M. M., & Rosbrook, B. (1998). Has the California tobacco control program reduced smoking? *The Journal of the American Medical Association*, *280*, 893-899. http://dx.doi.org/10.1001/jama.280.10.893

Puntoni, S., De Langhe, B., & Van Osselaer, S. M. J. (2008). Bilingualism and the emotional intensity of advertising language. *Journal of Consumer Research*, *35*, 1012-1025. http://dx.doi.org/10.1086/595022

Rajeev, B., & Michael, L. (1986). Affective responses mediating acceptance of advertising. *Journal of consumer research*, *13*, 234. http://dx.doi.org/10.1086/209063

Roper, B. W. (1973). Survey of public attitudes towards media. Television Information Office, National Association of Broadcasters, 745 Fifth Avenue, New York.

Rosenthal, M. B., Berndt, E. R., Donohue, J. M., Epstein, A. M., & Frank, R. G. (2003). Demand Effects of Recent Changes in Prescription Drug Promotion. *Journal of Frontiers in Health Policy Research*, *6*.

Schiffman, L. G., Kanuk, L. L., & Joseph, W. (2010). *Consumer Behavior* (10th ed). New York, Pearson Prentice Hall.

Shoham, A. (1996). Effectiveness of standardized and adapted television advertising: An international field study approach. *Journal of International Consumer Marketing*, *9*, 5-23. http://dx.doi.org/10.1300/J046v09n01_02

Shyam, S., Narayan, S., Obregon, R., & Uppal, C. (1998). Does web advertising work? *Journalism & Mass Communication Quarterly*, *75*(4), 822-834. http://dx.doi.org/10.1177/107769909807500414

Solomon, M. R. (2002). *Consumer Behavior: Buying, Having, and Being* (5th ed.). New Jersey: Prentice Hall.

Stafford, M. R. (1993). *An Evaluation of the Effectiveness of the Appeal and the Medium within a Classification of Services*. unpublished doctoral dissertation, University of Georgia.

Stafford, M. R., Lippold, E. M., & Sherron, C. T. (2003). The contribution of direct mail advertising to average weekly unit sales. *Journal of Advertising Research*, *43*(2), 173-179.

Teijlingen, E. R., & Hundley, V. (2001). The importance of pilot studies, Social Research Update. Department of Sociology, University of Surry, UK.

Till, B. D., & Busler, M. (1998). Matching Products with Endorsers: Attractiveness versus Expertise. *Journal of Consumer Marketing*, *15*(6), 576-586. http://dx.doi.org/10.1108/07363769810241445

Vakratsas, D., & Ma, Z. (2005). A look at long run effectiveness of multimedia advertising and its implications for budget allocation decisions. *Journal of Advertising Research*, *45*(2), 241-254. http://dx.doi.org/10.1017/S0021849905050269

Zikmund, W. (2003). *Business research methods* (7th ed.). United States: South Western-Cengage Learning.

Appendix 1

Primary information

1. Please tell me whether you are exposed to drug advertisement:

( ) Yes ( ) No

If yes, Please choose the right choice which accurately represents your current position:

2. Gender:

( ) Male. ( ) Female.

3. Age

( ) From 25 – less than 35.

( ) From 35 – less than 45.

( ) From 45 – less than 55.

( ) 55 and over.

4. Educational Level:

( ) General practitioner

( ) Specialist

( ) Subspecialist

( ) Consultant

Appendix 2

5. Please put (X) sign on the statement which reflects your current position toward advertisement characteristics and its effect on your acceptance:

		Strongly Disagree	Disagree	Neutral	Agree	Strongly Agree
Advertisement Media						
1.	I find pharmaceutical advertisements very effective through magazines.					
2.	I find pharmaceutical advertisements very effective through newspapers.					
3.	I find pharmaceutical advertisements very effective through brochures					
4.	I find pharmaceutical advertisements very effective through radio.					
5.	I find pharmaceutical advertisements very effective through television.					
6.	I find pharmaceutical advertisements very effective through Internet websites.					
7.	I find pharmaceutical advertisements very effective through direct e-mail.					

	Advertisement Component	Strongly Disagree	Disagree	Neutral	Agree	Strongly Agree
8.	I think that the language used in pharmaceutical advertisement is clear.					
9.	I think that the English slogan used in					

	pharmaceutical advertisement is clear.					
10.	I think that the Arabic slogan used in pharmaceutical advertisement is clear.					
11.	I think that the presence of conversation in pharmaceutical advertisement is important.					
12.	I feel that the use of emotional message in pharmaceutical advertisement is effective.					
13.	I feel that the use of sexual appeal in pharmaceutical advertisement is effective.					
14.	I find disease awareness advertisement will create unnecessary fear.					
15.	I find the use of music in pharmaceutical advertisement is effective.					
16.	I find the use of animation in pharmaceutical advertisement is effective.					
17.	I find the use of comedies in pharmaceutical advertisement is effective.					
18.	I feel that colorful pharmaceutical advertisements attract my attention.					
19.	I find that Pharmaceutical advertisements are interesting when a picture appears in it.					
20.	I like the presence of detailed information about side effect in the pharmaceutical advertisement.					
21.	I like the presence of detailed information about the disease in the pharmaceutical advertisement.					
22.	I like the presence of detailed information about the efficacy in the pharmaceutical advertisement.					
23.	I like the presence of detailed information about the drug use in the pharmaceutical advertisement.					

	Advertisement message	**Strongly Disagree**	**Disagree**	**Neutral**	**Agree**	**Strongly Agree**
24.	In pharmaceutical advertisement, I think they use simple medical terms.					
25.	I feel that pharmaceutical advertisements are simple and clear to all education level.					
26.	I find that Pharmaceutical advertisements lack important information.					
27.	I find the information inside the pharmaceutical advertisement is clear.					
28.	I like the pharmaceutical advertisement to be read rapidly.					
29.	I find that the information inside the pharmaceutical advertisement is credible.					
30.	I feel that pharmaceutical advertisements are misleading.					
31.	I find that the source of information in pharmaceutical advertisement is credible .					
32.	I find that the actors selected in the pharmaceutical advertisement are credible.					
33.	The information in the pharmaceutical advertisement should be presented without exaggeration.					
34.	I feel that the pharmaceutical advertisement effective within three times exposure.					

35.	I feel that the pharmaceutical advertisement still effective after ten times exposure.					
36.	I feel that pharmaceutical advertisement has to be short.					
37.	I feel that pharmaceutical advertisement has to be long .					
38.	I feel that the length of the pharmaceutical advertisement affect the quantity/quality of information included.					
	Level of acceptance	**Strongly Disagree**	**Disagree**	**Neutral**	**Agree**	**Strongly Agree**
39.	I have a positive attitude toward the advertised drug .					
40.	I usually prescribe the advertised drug to my patients.					
41.	I usually encourage my colleagues to prescribe the advertised drug.					
42.	I usually use the advertised drug for myself.					
43.	I have no reservations toward the advertised drugs.					
44.	I highly recommend the drug companies to advertise through different media.					